SL-T4232IRC050-L395-B

DATA SHEET

SPEC. NO. : SZ19091202
DATE : 2019/09/24
REV. A/1

Approved By: Checked By: Prepared By:

Absolute Maximum Ratings at Ta=25

Parameter	MAX.	Unit
Power Dissipation	150	mW
Continuous Forward Current	70	mA
Peak Forward Current[*3]	700	mA
Reverse Voltage	5	V
Electrostatic Discharge (HBM)[*5]	2000	V
Moisture Sensitivity Level[*1]	5a	
Operating Temperature	-40 to + 85	
Storage Temperature	-40 to + 100	
IR Reflow Temperature[*4]	260 for 10 Seconds MAX.	

1. **Storage**

(1). Storage requirements before vacuum bag opened: Temperature<30 , Humidity<65%RH;

(2). Check air leakage and vacuum bag damage before opened. If there is any issue found, check the humidity indicator card immediately after bag opened:

a. If color changes on "10% circle" of the humidity indicator card only and not the circles of 20% and above, components can be used without additional handling;

b. If color changes on both 10% and 20% circles but not the circles of 30% and above, components must be dehumidified according to the conditions of bullet (5);

c. If color changes on 10%, 20%, and 30% circle or above, the product should be returned to the supplier for high temperature dehumidification;

(3). After bag opened, manual soldering or reflow process must follow the following requirements:

a. Complete soldering / reflow within 24 hours;

b. Requirements of working environment: Temperature<30 , Humidity<60%RH;

(4). If the working condition is outside (3)a or (3)b requirement, the components must be dehumidified according to the conditions of bullet (5);

(5). Low temperature dehumidification: temperature 60±5 24 hours;

(6). Shelf life: 30 days. If it's over 30 days from the production date on the package label, the components must be dehumidified according to the condition of bullet (5). If customer is unable to dehumidify, return components to LIGHT for dehumidification.

2. **Cleaning:**

Use alcohol-based cleaning solvents such as isopropyl alcohol to clean the LED if necessary.

3. **Peak Forward Current:**

Condition for is IFP pulse Pulse Width≤100μs and duty≤1%.

4. **IR Reflow Temperature:**

It is the Plate Temperature.

5. **Caution in ESD:**

Static Electricity and surge damages the LED. It is recommend to use a wrist band or anti-electrostatic glove when handling the LED. All devices, equipment and machinery must be properly grounded.

Electrical Optical Characteristics at Ta=25

Parameter	Symbol	Min.	Typ.	Max.	Unit	Test Condition
Radiant Intensity	Ie	12.5	20	---	mW/sr	I_F=20mA (Note 1,3)
		31	50	---	mW/sr	I_F=50mA (Note 1,3)
Viewing Angle(X)	$2\theta_{1/2}$	---	65	---	Deg.	(Note 2)
Viewing Angle(Y)		---	25	---		
Peak Wavelength	λp	---	940	---	nm	I_F=50mA
Spectral Line Half- Width	λ	---	50	---	nm	I_F=50mA
Forward Voltage	V_F	---	1.35	1.60	V	I_F=50mA
Reverse Current	I_R	---	---	10	μA	V_R=5V

Suggest IR Reflow Condition For Lead Free

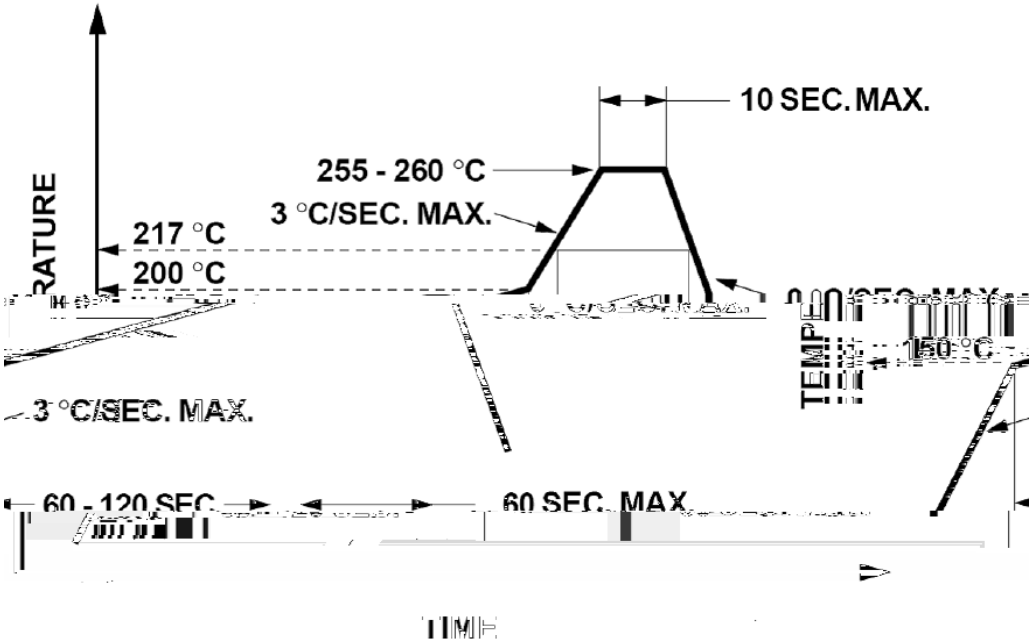

1. Reflow soldering should not be done more than two times.
2. When soldering, do not put stress on the LEDs during heating.

Soldering iron

1. When hand soldering, the temperature of the iron must less than 300 for 3 seconds.
2. The hand solder should be done only once.

Repairing
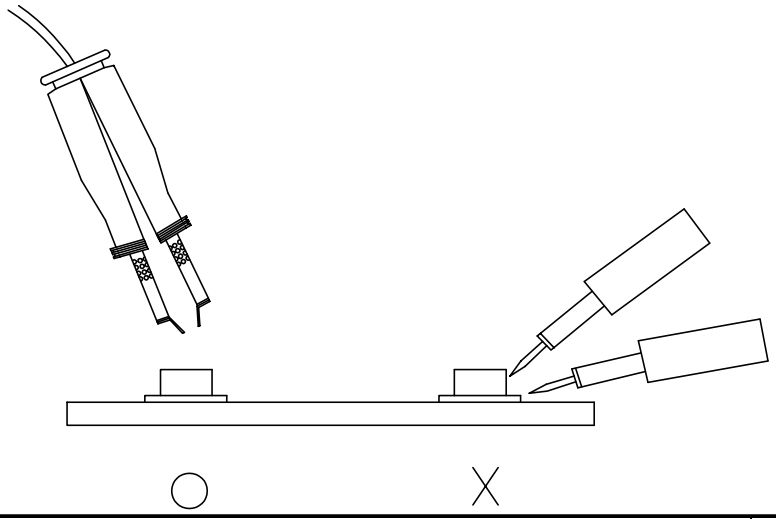
Repair should not be done after the LEDs have been soldered. When repairing is unavoidable, a double-head soldering iron should be used (as below figure). It should be confirmed beforehand whether the characteristics of LEDs will or will not be damaged by repairing.