Features

Pb free product—RoHS compliant
Low power consumption, High efficiency
Reliable and rugged
Long life – solid state reliability
Viewing Angle: 120°

Package Dimension

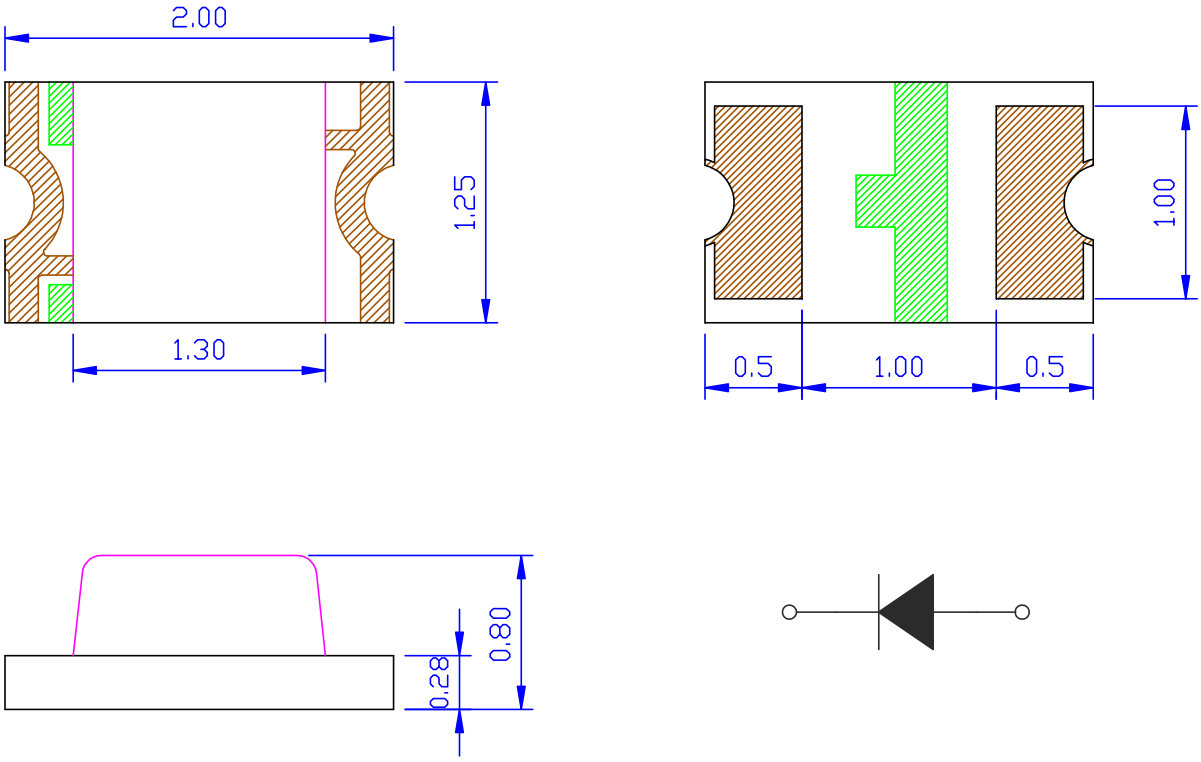

Part NO.	Lens Color	Source Color
SL-T0805GEC020-L80-A	Water Clear	Green

Notes:

1. All dimensions are in millimeters.
2. Tolerance is ±0.10mm unless otherwise noted
3. Specifications are subject to change without notice.

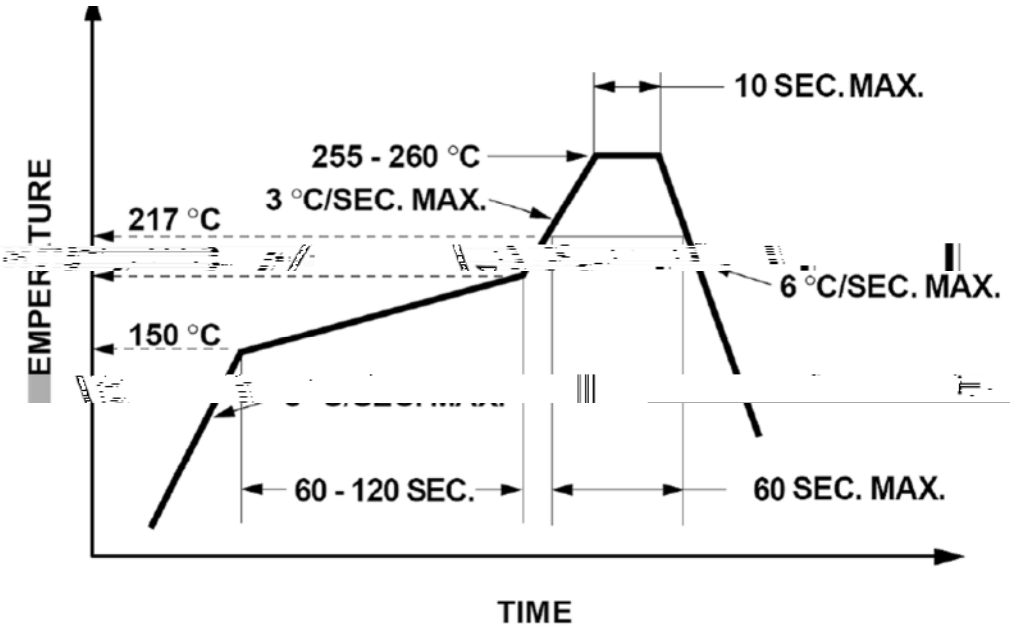

1. Reflow soldering should not be done more than two times.
2. When soldering, do not put stress on the LEDs during heating.

Soldering iron

1. When hand soldering, the temperature of the iron must less than 300℃ for 3 seconds.
2. The hand solder should be done only once.

Repairing
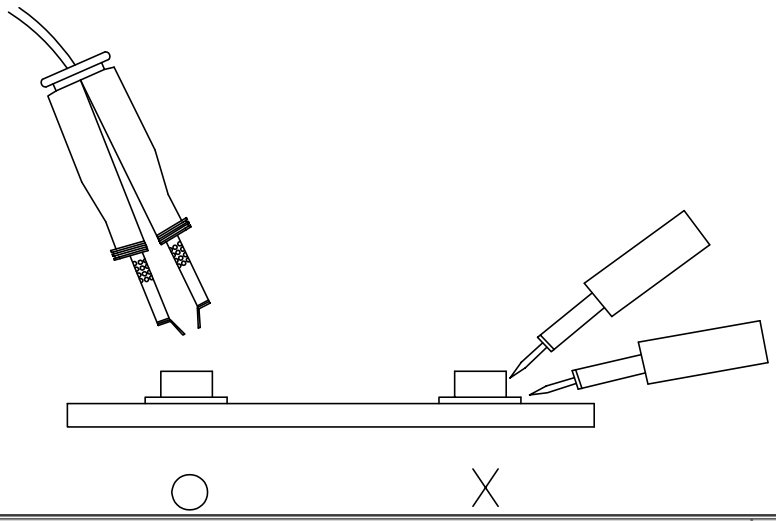
Repair should not be done after the LEDs have been soldered. When repairing is unavoidable, a double-head soldering iron should be used (as below figure). It should be confirmed beforehand whether the characteristics of LEDs will or will not be damaged by repairing.